MODEL	600VA/120V	600VA/230V
	711-C41100-K3	711-C43100-K3
R3AX	019-10330-00(330OHM 1206)	019-10620-00(620OHM 1206)
R32/R33	019-51470-00(4.7K 0603)*2	019-51270-00(2.7K 0603)*2
R35/R37/R54/R56 /R61/R66/R67/R70	019-52200-00(20K 0603)*8	019-52249-00(24.9K 0603)*8
R60/R68	019-51470-00(4.7K 0603)*2	019-51270-00(2.7K 0603)*2
ZD1	086-22130-00(7.5V Zener)	086-22131-00(15V Zener)
R9B	018-10470-00(470OHM*)	018-11232-00(2.32K*)
R9C	018-10220-00(220OHM*)	018-11560-00(5.6K*)
MOV01	094-10124-00	094-10253-00
PCB1	098-17591-01	098-17591-01
U01	618-01643-02	618-01643-02
SK	SK711-C41100-K3	SK711-C43100-K3

PHOENIXTEC	REVISION: K3-D	TITLE: M-C MAIN 600VA 230V RS232	SHEET 1 OF 5	DATE: 2007/07/25

SUB-ASSEMBLY PART NO: 711-C43100-K3

FILE NAME: C43100K3D-WIN.sch

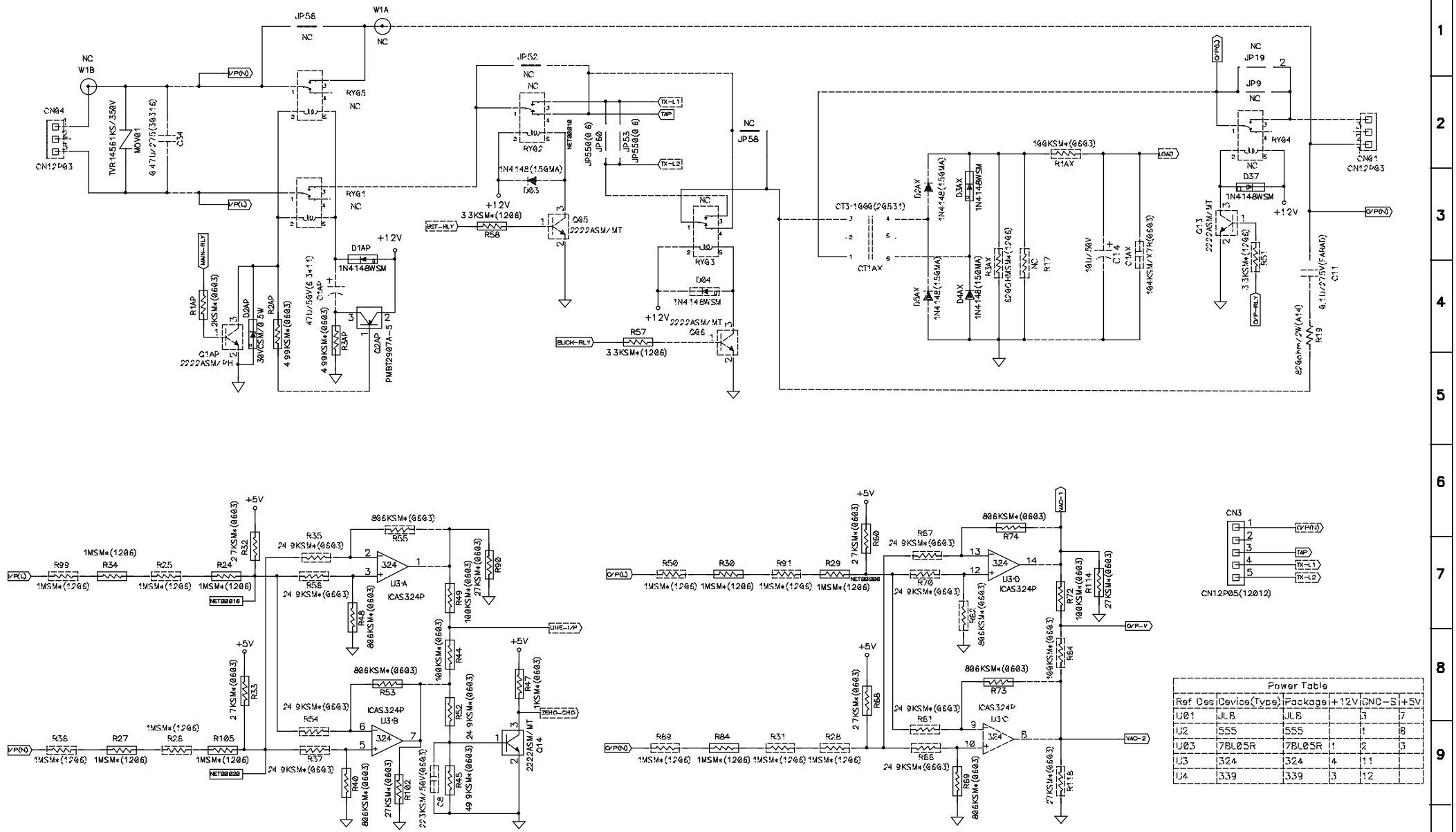

Power Table					
Ref Des	Device(Type)	Package	+12V	GND-S	+5V
U01	JLB	JLB		3	7
U2	555	555		1	8
U03	78L05R	78L05R	1	2	3
U3	324	324	4	11	
U4	339	339	3	12	

PHOENIXTEC	REVISION: K3-D	TITLE: M-C MAIN 600VA 230V RS232	SHEET 2 OF 5	DATE: 2007/07/25

SUB-ASSEMBLY PART NO: 711-C43100-K3

FILE NAME: C43100K3D-WIN.sch

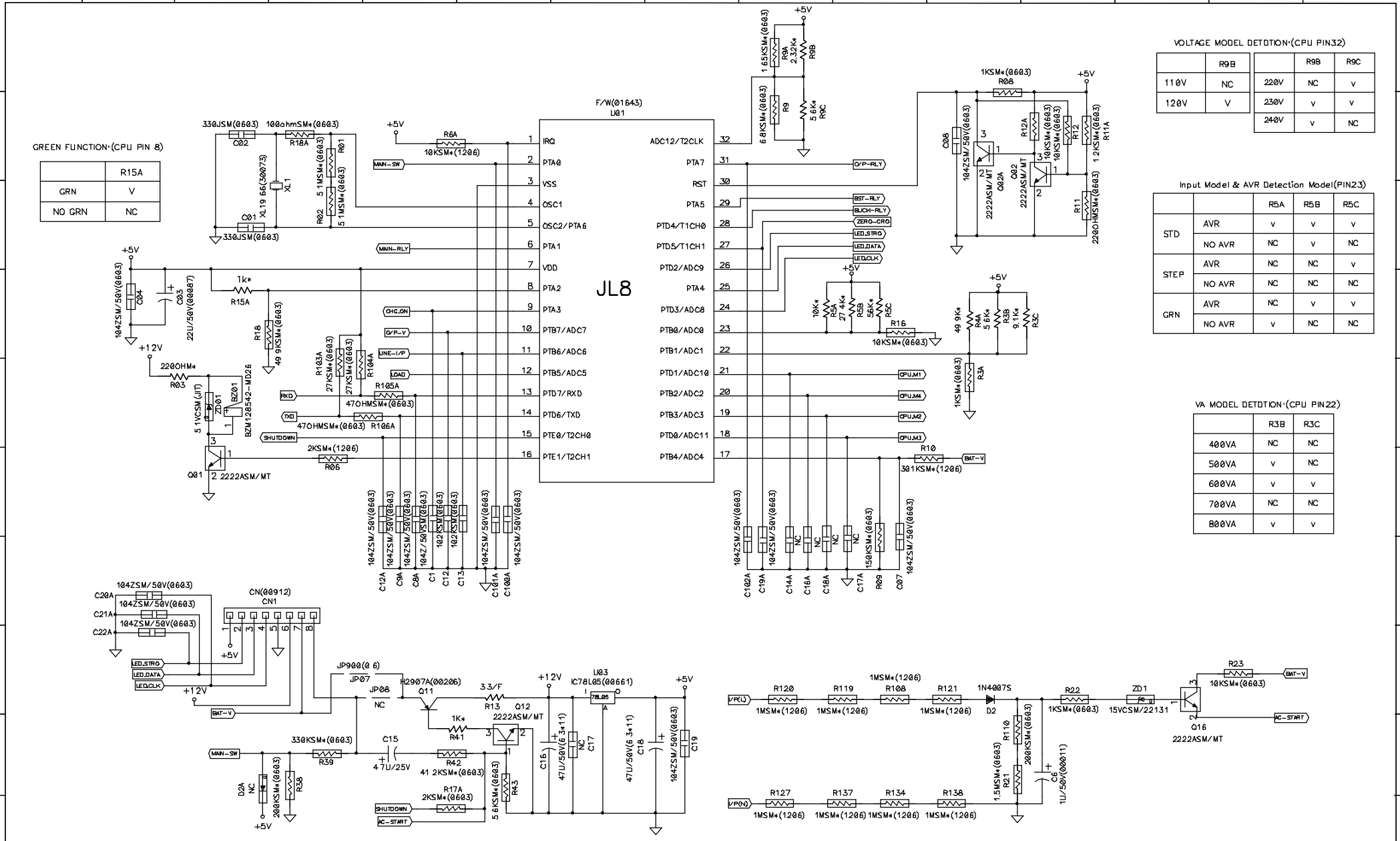
F/W(01643)
U01
JL8
IRQ
PTA0
VSS
OSC1
OSC2/PTA6
PTA1
VDD
PTA2
PTA3
PTB7/ADC7
PTB6/ADC6
PTB5/ADC5
PTD7/RXD
PTD6/TXD
PTE0/T2CH0
PTE1/T2CH1
ADC12/T2CLK
PTA7
RST
PTA5
PTD4/T1CH0
PTD5/T1CH1
PTD2/ADC9
PTA4
PTD3/ADC8
PTB0/ADC0
PTB1/ADC1
PTD1/ADC10
PTB2/ADC2
PTB3/ADC3
PTD0/ADC11
PTB4/ADC4
MAIN-SW
MAIN-RLY
CHG_ON
O/P_V
LINE-I/P
LOAD
RXD
TXD
SHUTDOWN
O/P-RLY
BST-RLY
BUCK-RLY
ZERO-CRO
LED_STRO
LED_DATA
LED_CLK
CPU_M1
CPU_M4
CPU_M2
CPU_M3
BAT-V
AC-START
VP(U)
VP(N)
GREEN FUNCTION·(CPU PIN 8)
VOLTAGE MODEL DETDTION·(CPU PIN32)
Input Model & AVR Detection Model(PIN23)
VA MODEL DETDTION·(CPU PIN22)
PHOENIXTEC
REVISION: K3-D
TITLE: M-C MAIN 600VA 230V RS232
SHEET 3 OF 5
DATE: 2007/07/25
SUB-ASSEMBLY PART NO: 711-C43100-K3
FILE NAME: C43100K3D-WIN.sch

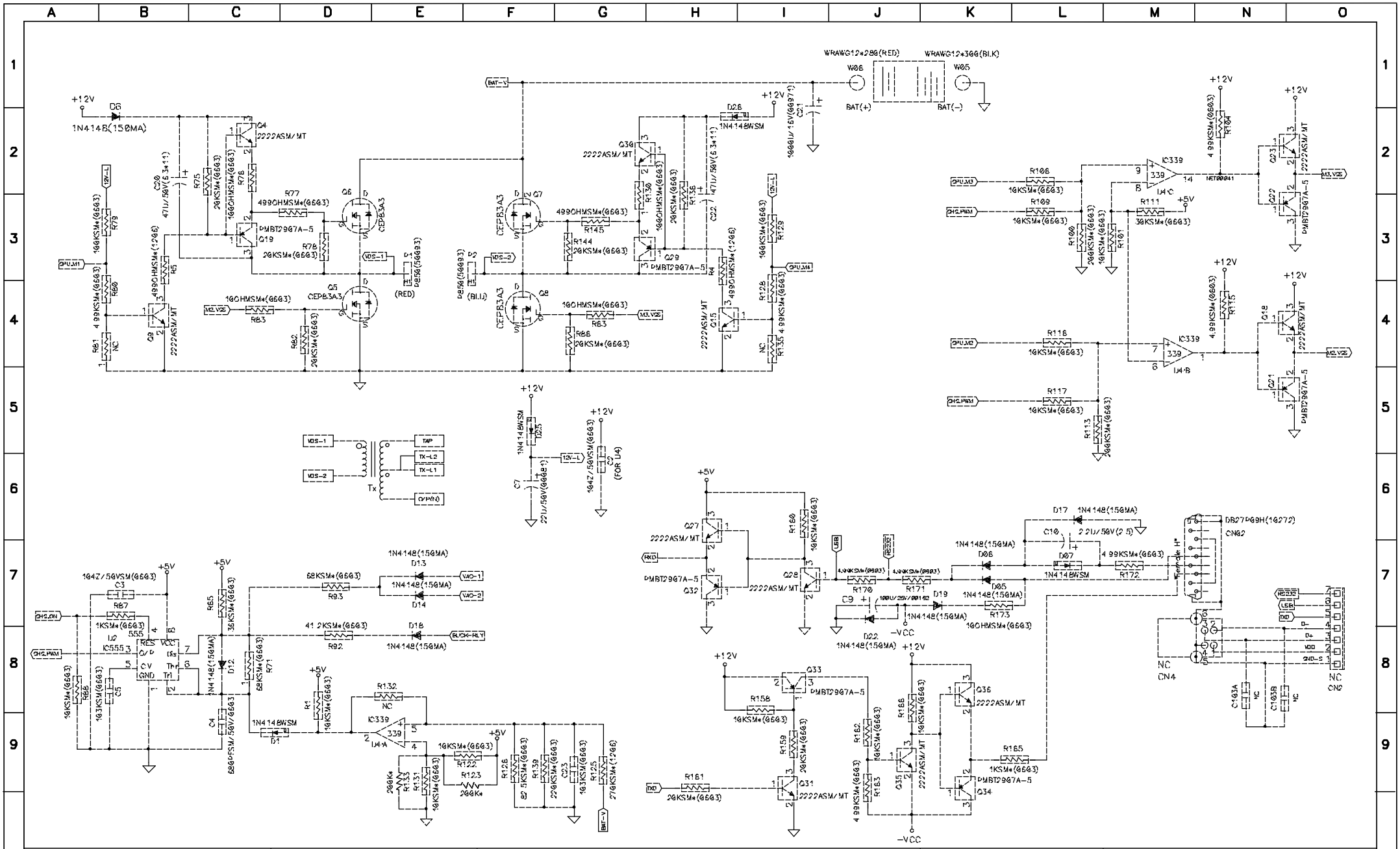

PHOENIXTEC	REVISION: K3-D	TITLE: M-C MAIN 600VA 230V RS232	SHEET 4 OF 5	DATE: 2007/07/25

SUB-ASSEMBLY PART NO: 711-C43100-K3

FILE NAME: C43100K3D-WIN.sch

R2
TXD — TXD
0OHMSM(1206)

R94
ZERO-CRO — ZERO-CRO
0OHMSM(1206)

R143
NET00020 — NET00020
0OHMSM(1206)

R151
RXD — RXD
0OHMSM(1206)

R141
NET00041 — NET00041
0OHMSM(1206)

R153
MAIN-RLY — MAIN-RLY
0OHMSM(1206)

R8
NET00008 — NET00008
0OHMSM(0805)J

R20
NET00053 — NET00053
0OHMSM(1206)

R59
MAIN-RLY — MAIN-RLY
0OHMSM(1206)

R7
NET00008 — NET00008
0OHMSM(0805)J

0OHMSM(0805)J
ZERO-CRO — ZERO-CRO
R95

JP71 JP550(0 6)
JP77 JP1500(0 6)
JP51 JP550(0 6)
JP70 JP550(0 6)
JP44 JP1400(0 6)
JP42 JP1150(0 6)
JP11 JP1300(0 6)
JP14 JP800(0 6)
JP16 JP900(0 6)
JP25 JP1300(0 6)
JP64 JP800(0 6)
JP41 JP1000(0 6)
JP55 JP700(0 6)
JP17 JP1300(0 6)
JP72 JP550(0 6)
JP91 JP500(0 6)

JP76 JP650(0 6)
JP65 JP550(0 6)
JP09 JP1500(0 6)
JP28 JP550(0 6)
JP22 JP650(0 6)
JP23 JP2500(0 6)
JP4 JP650(0 6)
JP21 JP550(0 6)
JP1 JP850(0 6)
JP8 JP900(0 6)
JP18 JP1300(0 6)
JP20 JP1500(0 6)
JP24 JP550(0 6)
JP31 JP1200(0 6)
JP36 JP1400(0 6)
JP39 JP1100(0 6)

JP112 JP650(0 6)
JP113 JP1000(0 6)
JP81 JP550(0 6)
JP63 JP650(0 6)
JP75 JP550(0 6)
JP27 JP1100(0 6)
JP40 JP500(0 6)
JP37 JP550(0 6)
JP30 JP550(0 6)
JP3 JP550(0 6)
JP7 JP650(0 6)
JP10 JP750(0 6)
JP12 JP850(0 6)
JP13 JP950(0 6)
JP15 JP1150(0 6)
JP29 JP1250(0 6)

JP73 JP1200(0 6)
JP66 JP1600(0 6)
JP57 JP700(0 6)
JP38 JP1400(0 6)
JP46 JP1400(0 6)
JP47 JP950(0 6)
JP45 NC
JP68 JP700(0 6)
JP54 JP1400(0 6)
JP74 JP1400(0 6)
JP49 JP600(0 6)
JP86 JP700(0 6)
JP87 JP1000(0 6)
JP88 JP600(0 6)
JP89 JP600(0 6)
JP90 JP600(0 6)

JP26 JP1100(0 6)
JP78 JP700(0 6)
JP96 JP600(0 6)
JP107 JP550(0 6)
JP110 JP600(0 6)
JP111 JP600(0 6)
JP93 JP1900(0 6)
JP82 JP600(0 6)

散热片下跳线

JP2 NC
JP5 NC
JP6 NC
JP62 NC
JP79 NC
JP84 NC
JP85 NC
JP92 NC
JP94 NC
JP95 NC
JP97 NC
JP98 NC
JP99 NC
JP100 NC
JP101 NC
JP102 NC
JP103 NC
JP104 NC
JP105 NC
JP106 NC
JP108 NC
JP109 NC

散热片下跳线

JP61 JP550(0 6)
JP83 JP900(0 6)

INSBQ5 INSB
INSB(00004)

INSBQ6 INSB
INSB(00004)

INSBQ8 INSB
INSB(00004)

INSBQ7 INSB
INSB(00004)

INSSQ8 INSS
INSS(00314)

RIVET
RW06
RIV4 0*3 5

RIVET
RW05
RIV4 0*3 5

HEAT SINK
HS01
HS(00570)

SCREW
SCM3*10L
SCMQ7

SCREW
SCM3*10L
SCMQ6

SCREW
SCM3*10L
SCMQ8

SCREW
SCM3*10L
SCMQ5

SCREW
SCM3*8(90207)
SCMHS01B

SCREW
SCM3*8(90207)
SCMHS01A

SCREW
NC
SCMHS01C

SCREW
NC
SCMHS01D

PHOENIXTEC	REVISION: K3-D	TITLE: M-C MAIN 600VA 230V RS232	SHEET 5 OF 5	DATE: 2007/07/25

SUB-ASSEMBLY PART NO: 711-C43100-K3

FILE NAME: C43100K3D-WIN.sch